LOCINOX®

WWW.LOCINOX.COM

CODE: LAKQ U2

① Explosion & Dimensions

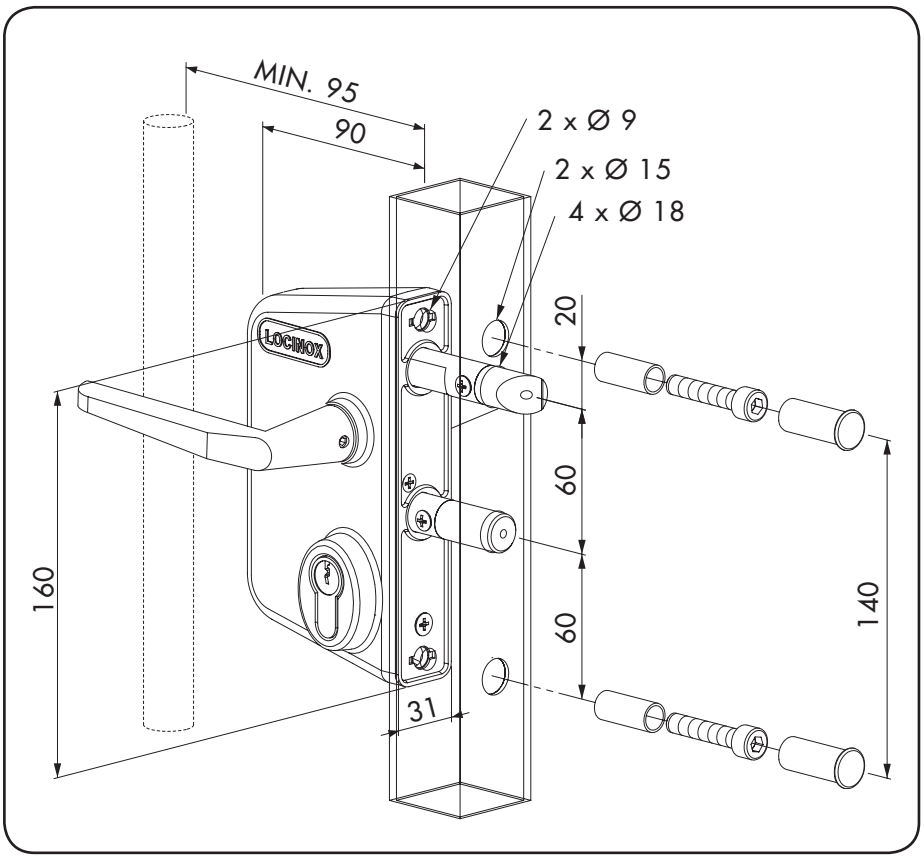

② Profile types

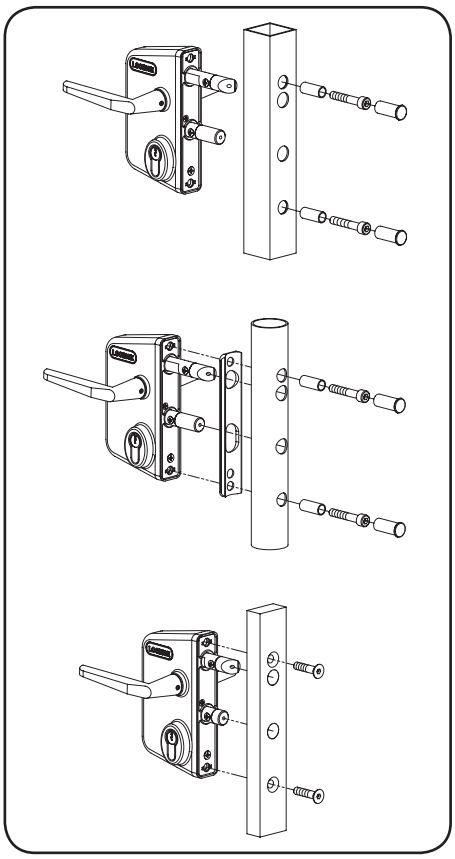

③ Left / Right changing

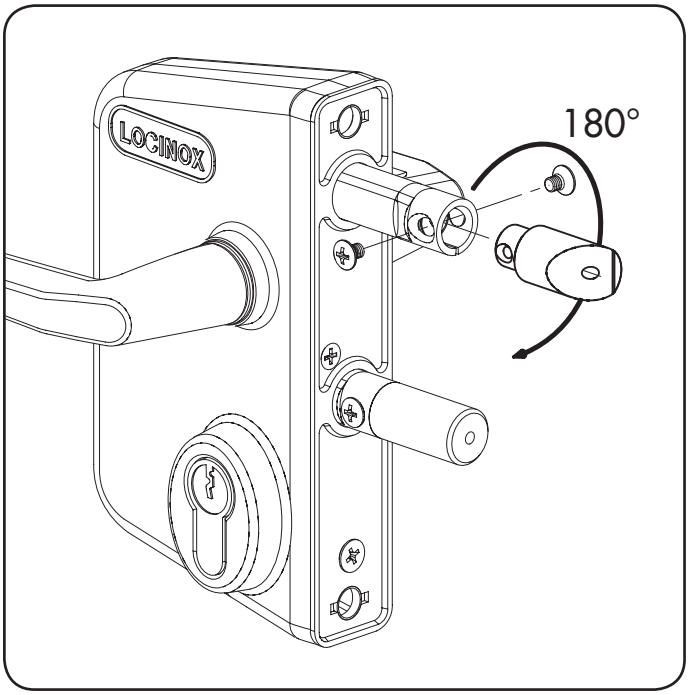

④ Key operated (B) & Throw (A)

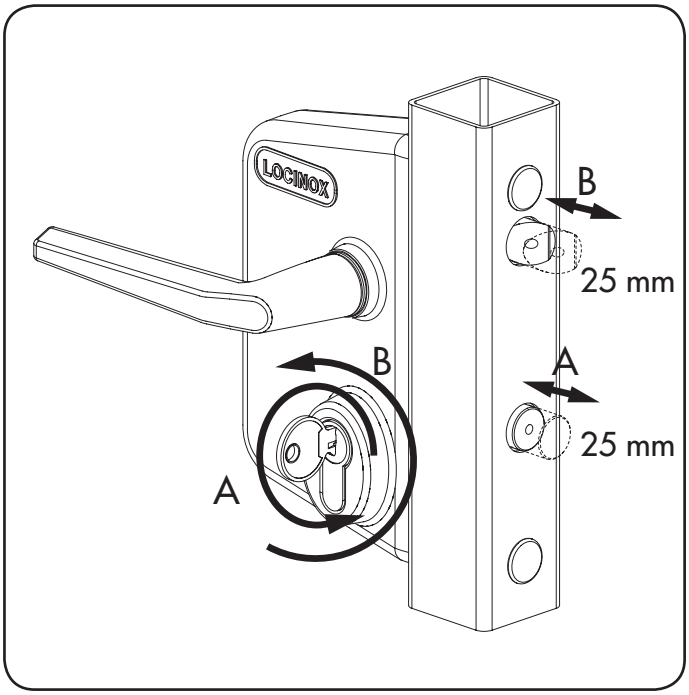

CE

2012-08-21 - rev 1

⑤ Throw adjustment: 20 mm

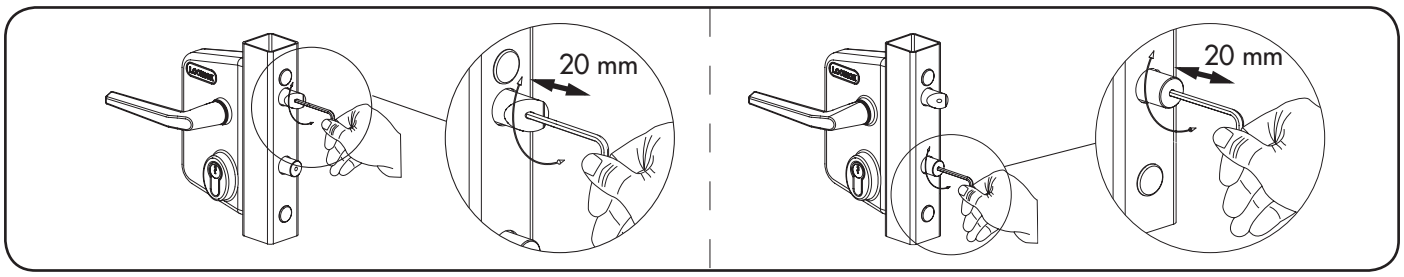

⑥ SAKL QF: Standard industrial keep

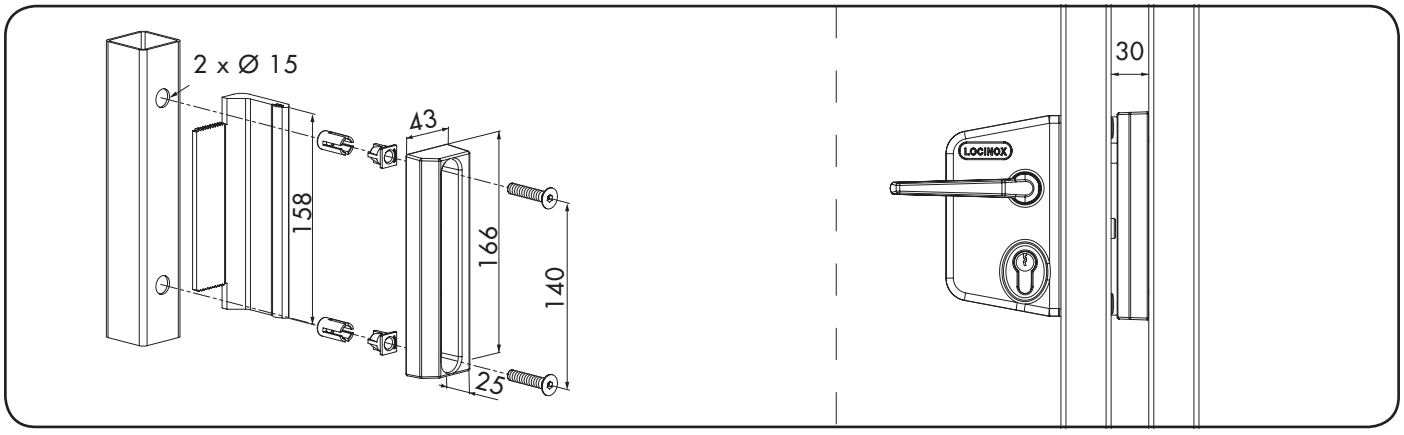

⑦ SHKL QF: Industrial security keep

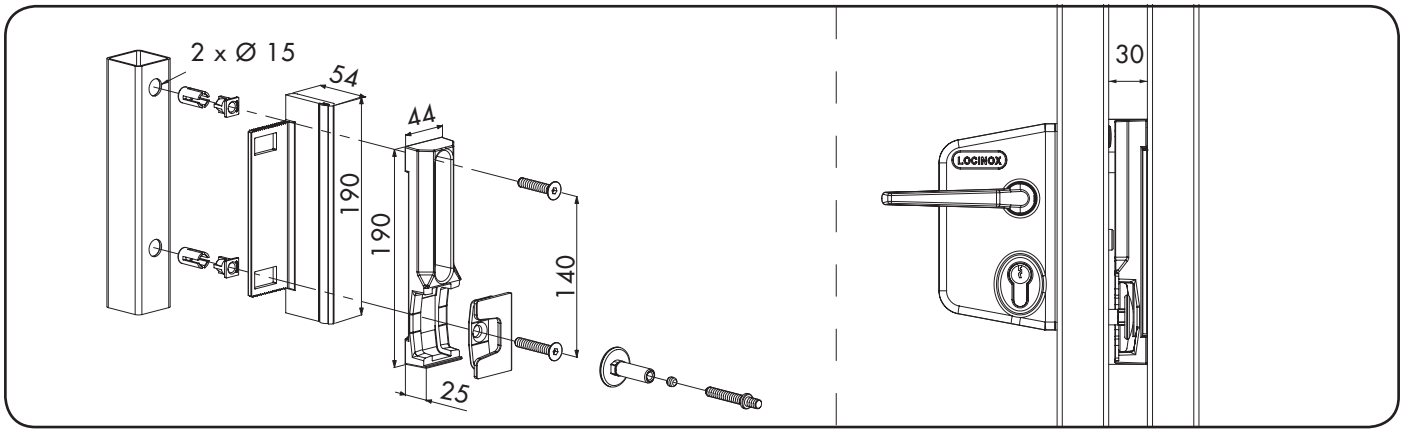

⑧ Durability test results

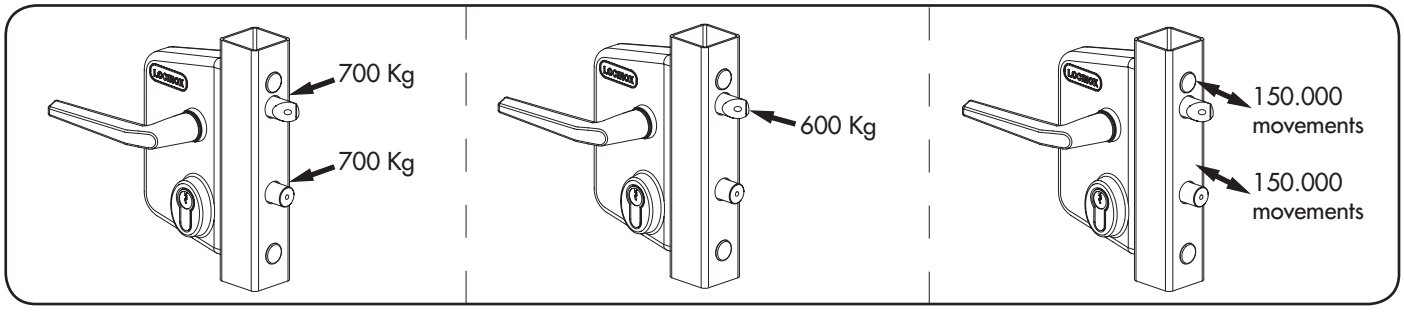

LOCINOX®
WWW.LOCINOX.COM

Doc. Nr.: MANU-000063

Locinox nv • Mannebeekstraat 21 • B-8790 Waregem • Belgium - Europe
Tel. +32 (0)56 77 27 66 • Fax. +32 (0)56 77 69 26 • E-mail: locinox@locinox.com

* M A N U - 0 0 0 0 6 3 *

CE

2012-08-21 - rev 1